SJIII 3215/19
ELECTRIC SCISSOR LIFTS

STANDARD FEATURES

- Tilt sensor 1.5 x 3.5
- Drivable at full height
- Variable speed, front two wheel hydraulic drive
- 90° steering (zero inside turning radius)
- Wet disc SAHR brakes
- Proportional controls for drive & lift functions
- 0.91 m roll out extension deck
- 24V DC power source
- 250 Ah batteries
- Low voltage battery protection
- 25% gradeability
- Solid rubber, non-marking tyres
- Pothole protection system
- Wiring for AC outlet on platform
- Tilt alarm with drive & lift cut-out
- All motion audible alarm
- Overload sensing system
- Lowering warning system
- Lanyard attachment points
- Operator horn
- Flashing light
- Half height spring hinged gate
- Forklift pockets and tie down/lift lugs
- Relay based control system
- Colour coded and numbered wiring system

ACCESSORIES AND OPTIONS

- AGM batteries
- Dual flashing lights
- Hinged railing system
- Full height spring hinged gate*

*not available with hinged railing system

*Capacities, and machine weights may differ when options are added

AU/NZ
ENG/03/2015

SJIII 3215/19 ELECTRIC SCISSOR LIFTS

Dimensions	SJIII 3215	SJIII 3219
A Work Height	6.57 m	7.79 m
B Raised Platform Height	4.57 m	5.79 m
C Lowered Platform Height	0.88 m	0.99 m
D Overall Width	0.81 m	0.81 m
E Overall Length	1.78 m	1.78 m
F Stowed Height (Rails Up)	1.88 m	1.99 m
G Stowed Height (Rails Down)	1.53 m	1.64 m
H Platform Width (Inside Dimension)	0.66 m	0.66 m
I Platform Length (Inside Dimension)	1.63 m	1.63 m
Specifications	**SJIII 3215**	**SJIII 3219**
Extension Deck (Roll Out)	0.91 m	0.91 m
Ground Clearance (Stowed)	6.03 cm	6.03 cm
Ground Clearance (Raised)	1.78 cm	1.78 cm
Wheelbase	1.40 m	1.40 m
Weight	1,120 kg	1,557 kg
Gradeability	25%	25%
Turning Radius (Inside)	0	0
Turning Radius (Outside)	1.68 m	1.68 m
Lift Time (With Rated Load)	22 sec	21 sec
Drive Speed (Stowed)	3.2 km/h	3.2 km/h
Drive Speed (Raised)	1.1 km/h	1.1 km/h
Maximum Drive Height	Full Height	Full Height
Capacity (Overall)	227 kg	227 kg
Maximum # of Persons (0 wind rating)	2	2
Maximum # of Persons (12.5 m/sec wind rating)	1	1

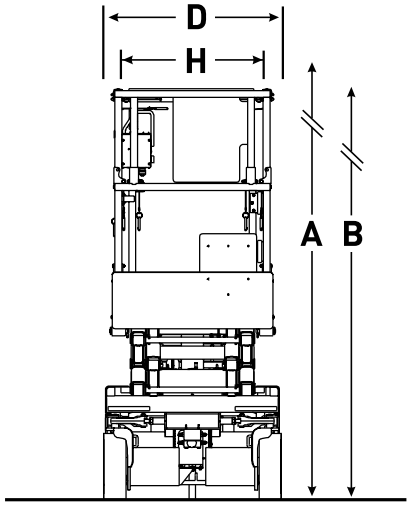

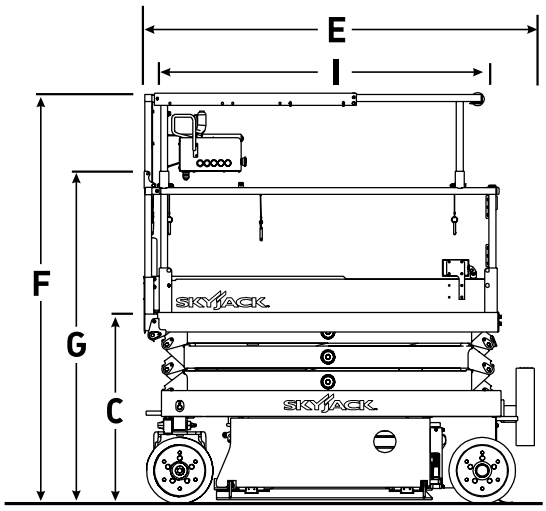

Skyjack Australia Pty Ltd
4 Coates Place
Wetherill Park
New South Wales, 2164
Tel: +61 (0) 2878 63200
Fax: +61 (0) 2878 63222
Email: jcranmer@skyjack.com

www.skyjack.com

This brochure is for illustrative purpose only and based on the latest information at the time of printing. Skyjack Inc. reserves the right to make changes at any time, without notice, to specifications, standard and optional equipment. Consult the Operating Maintenance and Parts Manuals for proper procedures. AS marked platforms are in conformance to Standard AS/NZS 1418.10:2011.

AU/NZ
ENG/03/2015